CTB 6253 X

60 cm Stainless Steel Front Recirculating Retractable Rangehood

Smart Solutions

- Halogen Illumination
- Aluminium Cassette Filter
- Easy to use

Main Features

Type:	Slide-out
Control:	Slider control
Construction type:	Stainless Steel
Operation levels:	2
Lighting:	2 x 28 Watt halogen lamps
Filtration:	2 x Washable aluminium cassette filters, , 1 x front recirculation carbon filter
Air extraction:	360m³/h maximum
Noise level high:	67db(A)
Noise level low:	54db(A)
Voltage:	220 - 240
Frequency:	50-60 Hz
Supply cord & plug:	2m with 10 Amp plug
Includes extra 80mm panel:	Yes

Dimensions & Weights
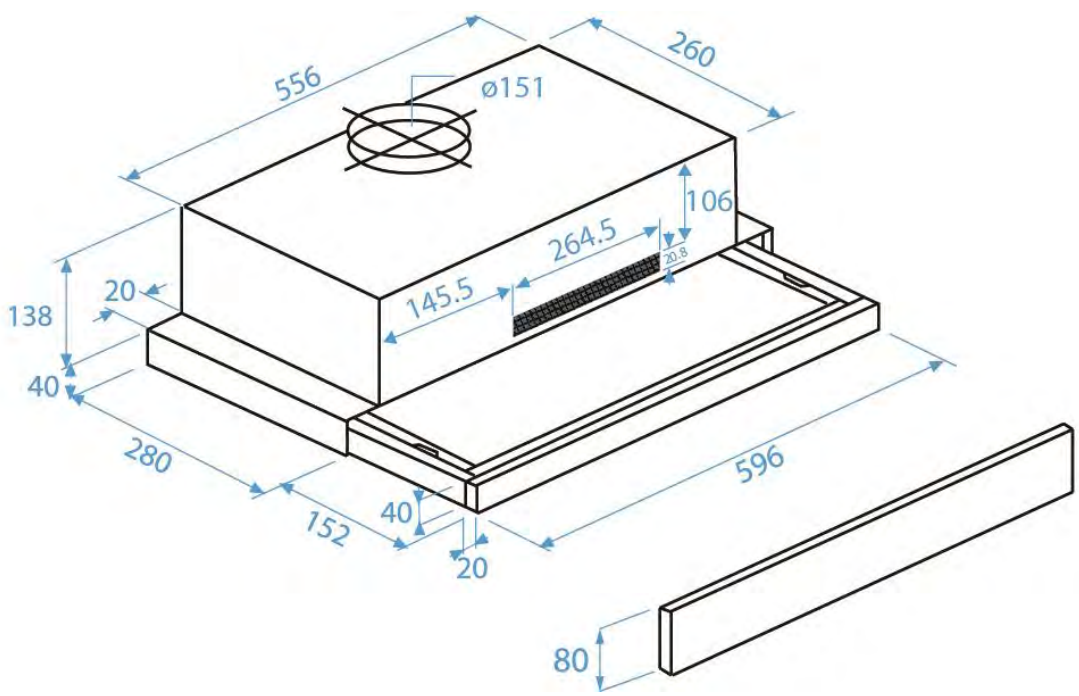
Unpackaged height:	178 mm
Unpackaged width:	596mm
Unpackaged depth:	280 mm
Packaged height:	230 mm
Packaged width:	670 mm
Packaged depth:	360 mm
Cut out dimensions (H x W x D):	135 x 556 x 280mm
Packaged weight:	8.5 kg
Unpackaged weight:	7.6 kg
EAN code:	8690842986246