BRH90TW
90 cm Stainless Steel Telescopic Rangehood

LED Illumination

Alluminium Cassette Filter

Easy to Use

Main Features

Type	Telescopic
Control:	Slide Switch
Construction Type:	Grey Painted & Stainless Steel Front Panel
Operation Levels:	3
Lighting:	2 x 3 Watt LED Lamps
Filtration:	2 x Washable Aluminium Cassette Filter
Filter:	1 x CF152 Included, Replacement Sold Separately
Air Extraction (according to EN1591):	430 m³/h
Dimension of Pipe Connection:	150 mm
Noise Level:	69 db(A)
Re-circulating Operation:	No
Ducted Operation:	Yes
Voltage:	220-240
Frequency:	50 Hz
Supply Cord & Plug:	Yes
Total Power Consumption:	111 W

Dimensions & Weights

Unpackaged Height:	230 mm
Unpackaged Width:	900 mm
Unpacked Depth:	306 mm
Unpackaged Weight:	8.9 kilograms
Packaged Height:	265 mm
Packaged Width:	990 mm
Packaged Depth:	400 mm
Packaged Weight:	11.1 kg
Cutout Dimensions(HxWxD):	135 x 850 x 280 mm
Ean Code:	8690842121715
Manufacturers Warranty:	2 Years

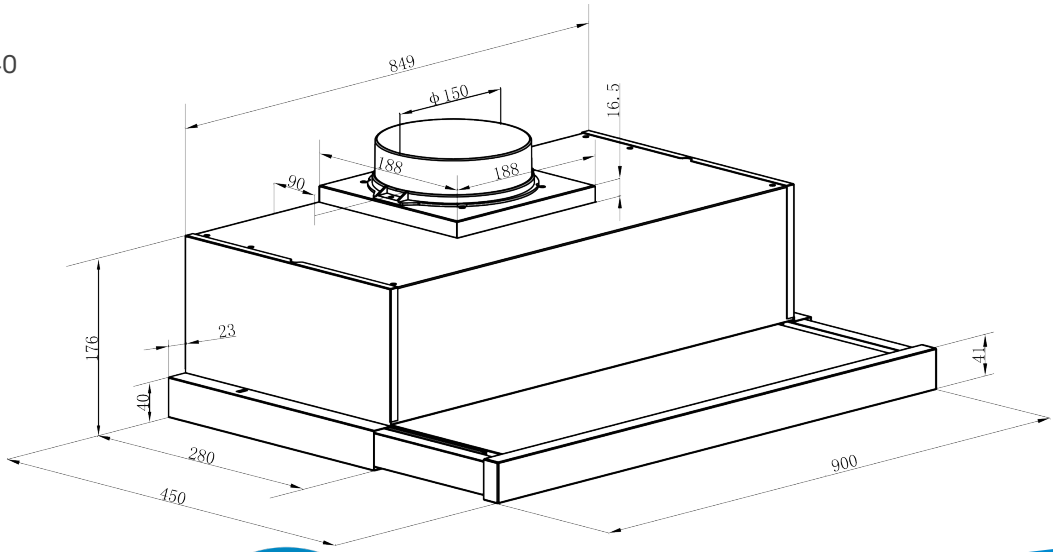

beko 5 YEAR WARRANTY*

beko

Official partner of the everyday

Specifications are correct at time of printing. Specifications may change without prior notice.