BFLB8010W

8 kg Washing Machine with Steam

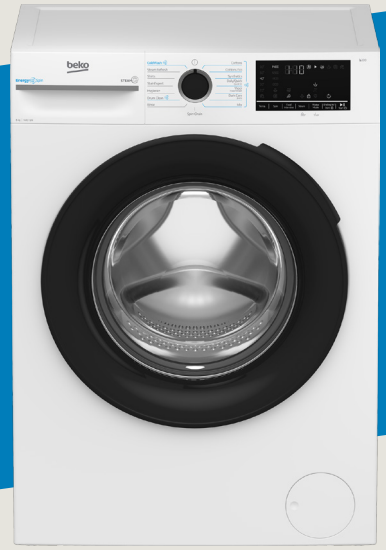

Energy Spin

5 YEARS MANUFACTURER WARRANTY 90

10 YEAR PARTS ONLY* COMPRESSOR/MOTOR WARRANTY

MADE IN EUROPE

STEAM cure

Washing Capacity	WELS Water Rating	Energy Rating	Max. Spin Speed
8 kg			1400 rpm

Design

Colour:	White
Door Finish:	Transparent with Black Rim
Door Opening Angle:	170°

Main Features

Max Loading Capacity:	8 kg
Spin Speed:	1400 rpm
AddGarment:	Yes

Performance

WELS Water Rating:	4 Stars
WELS Registration Number:	C46161
Water Consumption:	82 L
Energy Rating:	4.5 Stars
Energy Consumption:	256 kWh
Motor Type:	Prosmart™ Inverter
Water Inlet Type:	Single/Cold

Control Features

Display:	LED Digital
Remaining Time Indicator:	Yes
Time Delay:	0-24h
Temperature Selection:	Yes
Variable Spin Speed:	Yes

Programs

Number of Programs	15
•Cottons	•Cottons Eco
•Synthetics	•Daily Quick/Quick 14
•Wool /Handwash	•Dark Care/Jeans
•MIx	•ColdWash
•Steam Refresh	•Shirts
•Hygiene+(Allergy UK)	•Bedding
•DrumClean	•Rinse
•Spin+Drain	
Auxillary Functions:	Fast/Intensive, Steam, WaterMode, Child Lock, Prewash

Safety:

2 Button Start:	Yes
Child Lock:	Yes

Dimensions & Weights

Unpackaged/Packed Height:	845 mm / 885 mm
Unpackaged/Packed Width:	600 mm / 650 mm
Unpacked /Packed Depth:	546 mm / 565 mm
Unpackaged /Packed Weight:	68 kg / 69 kg
For more detailed dimensions	see page 2

Sku:	457100019700
Ean Code:	8690842727344
Manufacturers Warranty:	2 Years + 3 Years by Registration 10 Years Inverter Motor (Parts Only)
Launch Date:	March 2026

©Beko 2026

beko.com/au-en, beko.com/nz-en

*Specifications are correct at time of printing. Specifications may change without prior notice.

BFLB8010W

8 kg Washing Machine with Steam

EnergySpin - Save energy & water without changing how you wash. EnergySpin, Save up to 15% energy. Thats the equivalent of one free wash every week*; thanks to smart drum movements that dissolve detergent faster & clean effectively with less heat. ColdWash delivers the same spotless results, saving up to 60% energy and upt to 30% water**. And with WaterMode, you can reduce water usage by up to 28% per cycle*** without sacrificing performance , so every load is cleaner and kinder to the planet.

*Based on average household usage of BFLB903ADW1 vs our previous model BFLB902ADW.
**Comparing Cotton 40 full load vs ColdWash half load for BFLB903ADW1 and using liquid detergent.
***Comparing Cotton 40 full load vs Cotton 40 full load with Save Water mode selected on BFLB903ADW1.
Based on internal test results according to IEC-60456 Standard

SteamCure™ +Hygiene+- 99.9% allergen* free with the hygienic power of steam. SteamCure's Hygiene+ steam cycle provides improved levels of cleanliness by heating the water up to 60 °C, reducing common household allergens* by up to 99.9% (approved by Allergy UK) and removing 99.9% virus and bacteria (Airmid Certification).

* House Dust Mite Allergen, Cat Allergen, Dog Allergen, Fungi Allergen

Steam Refresh - Enjoy the feeling of refreshed clothes. When you wear clothes once and you don't want to fully wash them again, but a quick go-over would freshen up your clothes. Now your washing machine can refresh your clothes, remove wrinkles without doing a full wash. Steam infused into the washing machine refreshes the load so that you can enjoy fully refreshed clothes.

Daily Quick Program - The Daily Quick Program in all Beko Washing machines lets you wash a full load of lightly soiled laundry in just 28 minutes at 30 °C. Your laundry will be done before you can finish that half-hour comedy you've been meaning to catch up on.

Drum Clean Program - After you've run the machine enough times, that drum begins to smell a bit from all the humidity. DrumClean+ programme to remove any odours and deep-clean the drum. Remember, a clean drum means cleaner clothes, cycle after cycle.

©Beko 2026

beko.com/au-en, beko.com/nz-en

*Specifications are correct at time of printing. Specifications may change without prior notice.

BFLB8010W

8 kg Washing Machine with Steam

Perfect Design Pair

BFLB8010W
8kg

BDPB8010W
8kg Heat Pump

Compatible Stacking Kit for Dryer

SKWS54 - 54cm Stacking Kit with Shelf (White)
2986960200 - Universal with belt

Dimensions

D	Z	L	H	A	C	G	P	M	N	S	Units
596	845	981.2	27.5	431.3	33.5	43	24.2	496.4	518.5	1042.2	mm

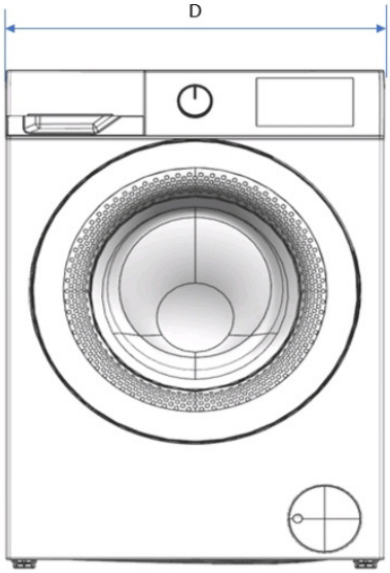

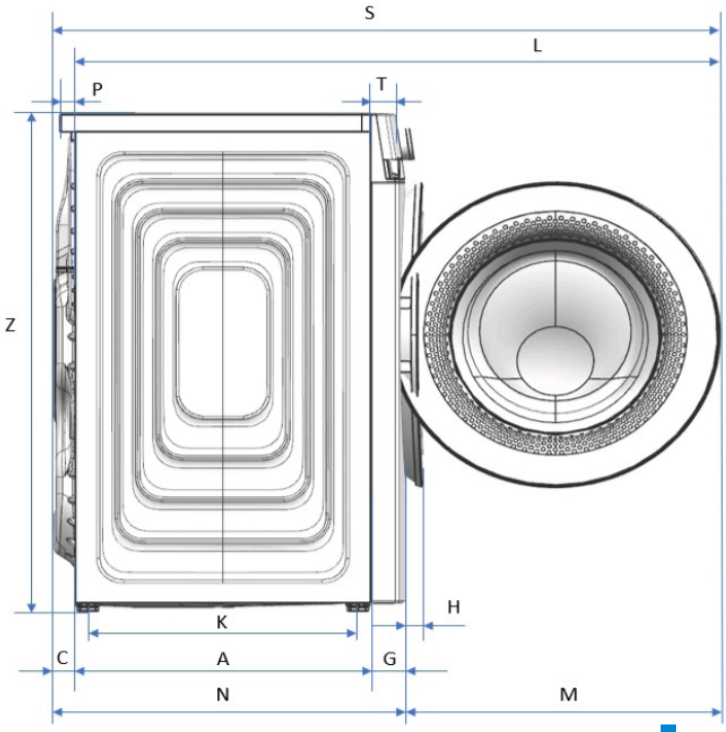

©Beko 2026

beko.com/au-en, beko.com/nz-en

*Specifications are correct at time of printing. Specifications may change without prior notice.